SOUTHEAST HENRY & F STREET DRAINAGE IMPROVEMENTS
CITY OF BENTONVILLE

BENTONVILLE, ARKANSAS

FEBRUARY 2022

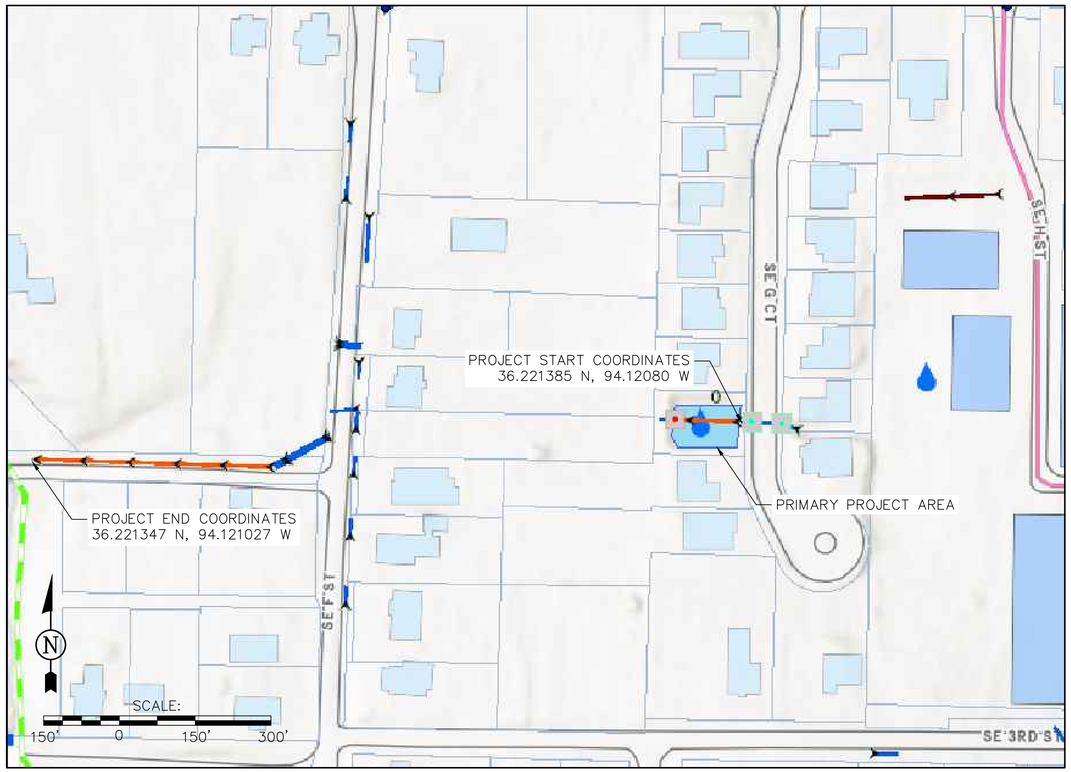

INDEX OF DRAWINGS	
SHEET #	SHEET TITLE
C1	COVER SHEET
C2	GENERAL NOTES AND QUANTITIES
C3	PLAN SHEET (1)
C4	PLAN SHEET (2)
C5	PLAN & PROFILE SHEET (1)
C6	PLAN & PROFILE SHEET (2)
C7	PROJECT DETAILS

Know what's **below.**
Call before you dig.

PMI

PROJECT NO. BENV-12313

CERTIFICATE OF AUTHORIZATION
POLLUTION MANAGEMENT, INC.
No. 331
ARKANSAS ENGINEER

60% SUBMITTAL

GENERAL NOTES:

1. THE CONTRACTOR SHALL OBTAIN ALL PERMITS REQUIRED BY LOCAL, CITY, COUNTY, STATE, OR OTHER JURISDICTION, INCLUDING BUILDING PERMITS, STAA, AND SWPPP, AND PAY ALL THE FEES FOR SUCH PERMITS BEFORE START OF ANY CONSTRUCTION ACTIVITIES.

2. CAUTION: UNDERGROUND UTILITIES ARE WITHIN AND ADJACENT TO THE LIMITS OF CONSTRUCTION. AN ATTEMPT HAS BEEN MADE TO LOCATE THESE UTILITIES ON THE PLANS. HOWEVER, ALL EXISTING UTILITIES MAY NOT BE SHOWN, AND THE ACTUAL LOCATIONS OF THE UTILITIES MAY VARY FROM THE LOCATIONS SHOWN. PRIOR TO BEGINNING ANY TYPE OF EXCAVATION, THE CONTRACTOR SHALL CONTACT THE UTILITIES INVOLVED AND MAKE ARRANGEMENTS FOR THE LOCATION OF THE UTILITIES ON THE GROUND. THE CONTRACTOR SHALL MAINTAIN THE UTILITY LOCATION MARKINGS UNTIL THEY ARE NO LONGER NECESSARY.

3. ARKANSAS STATE LAW, THE UNDERGROUND FACILITIES DAMAGE PREVENTION ACT, REQUIRES TWO WORKING DAYS ADVANCE NOTIFICATION THROUGH THE ARKANSAS ONE-CALL SYSTEM CENTER BEFORE EXCAVATING USING MECHANIZED EQUIPMENT OR EXPLOSIVES (EXCEPT IN THE CASE OF AN EMERGENCY). THE ONE-CALL SYSTEM PHONE NUMBER IS 1-800-482-8998. THE CONTRACTOR IS ADVISED THAT THERE IS A SEVERE PENALTY FOR NOT MAKING THIS CALL. NOT ALL UTILITY COMPANIES ARE MEMBERS OF THE ARKANSAS ONE-CALL SYSTEM; THEREFORE,THE CONTRACTOR IS ADVISED TO CONTACT ALL NON-MEMBER UTILITIES AS WELL AS THE ONE-CALL SYSTEM.

4. THE CONTRACTOR SHALL FIELD VERIFY THE DEPTHS OF ALL SEWER LINES, WATER LINES, STORM DRAINS, AND OTHER UTILITIES.

5. IT IS THE CONTRACTOR'S RESPONSIBILITY TO ADEQUATELY PROTECT ALL EXISTING UTILITIES DURING CONSTRUCTION.

6. THE CONTRACTOR SHALL TAKE WHATEVER SPECIAL MEASURES NECESSARY SO THAT OVERLAND DRAINAGE IS NOT IMPEDED BY CONSTRUCTION ACTIVITIES. THIS MAY INCLUDE FILLING AND GRADING OR MAY INCLUDE CONSTRUCTING SWALES OR OTHER MEANS OF DRAINAGE. IN ALL CASES, THE WORK AND FINAL INSTALLATION SHALL NOT IMPOUND DRAINAGE. FLOODING DAMAGE SHALL BE MADE AT CONTRACTORS EXPENSE.

7. THIS WORK SHALL CONSIST OF DEMOLISHING EXISTING STORM SEWER STRUCTURES AND INSTALLING NEW STORM SEWER PIPING AND INFRASTRUCTURE AS ADDRESSED IN THE UNIT PRICE SCHEDULE AND/OR ON THE PLANS, AND PERFORMING ANY AND ALL OTHER WORK INCIDENTAL THERETO. THE CONTRACTOR SHALL, UNLESS OTHERWISE SPECIFIED, FURNISH ALL LABOR, TOOLS, AND EQUIPMENT NECESSARY TO COMPLETE THE PROJECT. NO SEPARATE PAYMENT WILL BE MADE FOR THOSE MATERIALS OR WORK REQUIRED TO MAKE A COMPLETE,OPERABLE, AND ACCEPTABLE INSTALLATION AS SHOWN ON PLANS OR INDICATED IN THESE SPECIFICATIONS, EXCEPT AS SHOWN ON THE UNIT PRICE SCHEDULE. ANY MATERIALS AND/OR WORK NOT ITEMIZED IN THE UNIT PRICE SCHEDULE OR ADDRESSED IN THE PLANS OR SPECIFICATIONS, BUT NONETHELESS REQUIRED FOR A COMPLETE, OPERABLE, AND ACCEPTABLE INSTALLATION, SHALL BE CONSIDERED SUBSIDIARY TO THE MOST CLOSELY ASSOCIATED BID ITEM AND THE COST THEREOF INCLUDED IN THAT ITEM'S BID PRICE.

8. IN SUBMITTING A BID ON THIS PROJECT, IT SHALL BE THE CONTRACTOR'S SOLE RESPONSIBILITY TO INSPECT THE STORM SEWER PIPE ROUTE AND TO CONSIDER THE DIFFICULTIES, CONSTRAINTS, AND SPECIAL ATTENTION NEEDED TO COMPLETE THE PROJECT.

9. THE CONTRACTOR SHALL UTILIZE FLAGGERS PER THE MOST RECENT VERSION OF THE MANUAL ON UNIFORM TRAFFIC CONTROL DESIGN (MUTCD) STANDARDS AND GUIDES FOR TRAFFIC CONTROL WHEN PORTIONS OF ROADS ARE CLOSED DUE TO UTILITY CONSTRUCTION.

60% SUBMITTAL

SUBMITTED FOR REVIEW

SHEET TITLE: GENERAL NOTES AND QUANTITIES

PROJECT TITLE: DRAINAGE IMPROVEMENTS
SOUTHEAST HENRY & F STREET
CITY OF BENTONVILLE
BENTONVILLE, ARKANSAS

REVISIONS:

NO:	DATE:	DESCRIPTION:	BY:

CIVIL ENGINEERING AND ENVIRONMENTAL SERVICES
3512 SOUTH SHACKLEFORD RD
LITTLE ROCK, ARKANSAS 72205
PH: (501) 221-7122 FX: (501) 221-7775

DESIGNED BY: JDM
DRAWN BY: JDM
CHECKED BY: BJW
DATE: FEB. 18, 2022
SCALE: N.T.S.

FILE: L:\BENTONVILLE, CITY OF\BENV-12313 - SE HENRY AND F STREET\DRAWINGS\BENV-12313 SCHEMATIC - 60%.DWG

JOB NUMBER:
BENV-12313

SHEET NUMBER:
C2

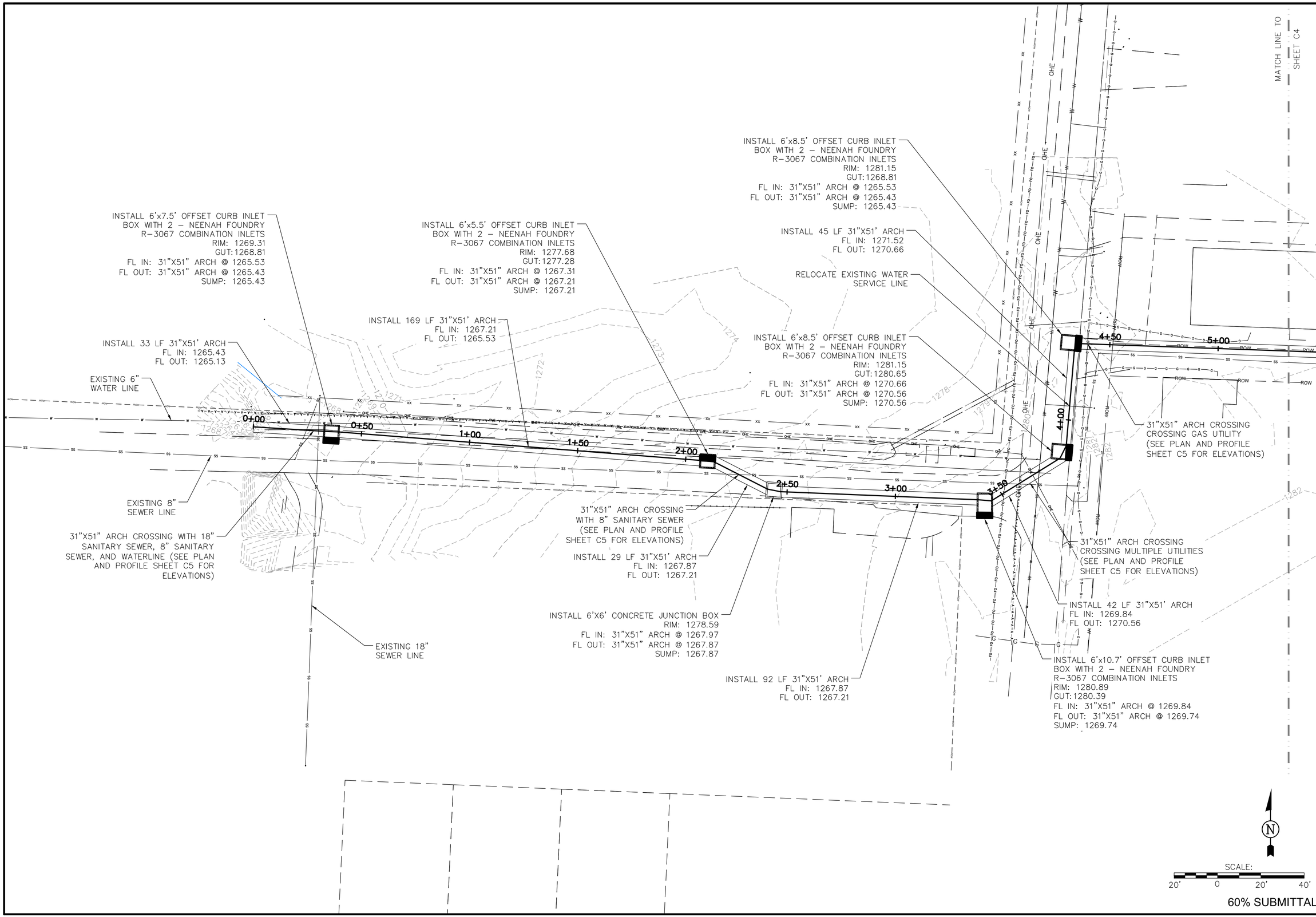

60% SUBMITTAL

SUBMITTED FOR REVIEW

SHEET TITLE: PLAN SHEET (1)

PROJECT TITLE: DRAINAGE IMPROVEMENTS
SOUTHEAST HENRY & F STREET
CITY OF BENTONVILLE
BENTONVILLE, ARKANSAS

REVISIONS:

NO:	DATE:	DESCRIPTION:	BY:

CIVIL ENGINEERING AND
ENVIRONMENTAL SERVICES
3512 SOUTH SHACKLEFORD RD
LITTLE ROCK, ARKANSAS 72205
PH: (501) 221-7122 FX: (501) 221-7775

DESIGNED BY: JDM
DRAWN BY: JDM
CHECKED BY: BJW
DATE: FEB. 18, 2022
SCALE: 1" = 20'

FILE: L:\BENTONVILLE, CITY OF\BENV-12313 - SE HENRY AND F STREET\DRAWINGS\BENV-12313 SCHEMATIC - 60% - PROFILE TRIAL.DWG

JOB NUMBER:
BENV-12313

SHEET NUMBER:
C3

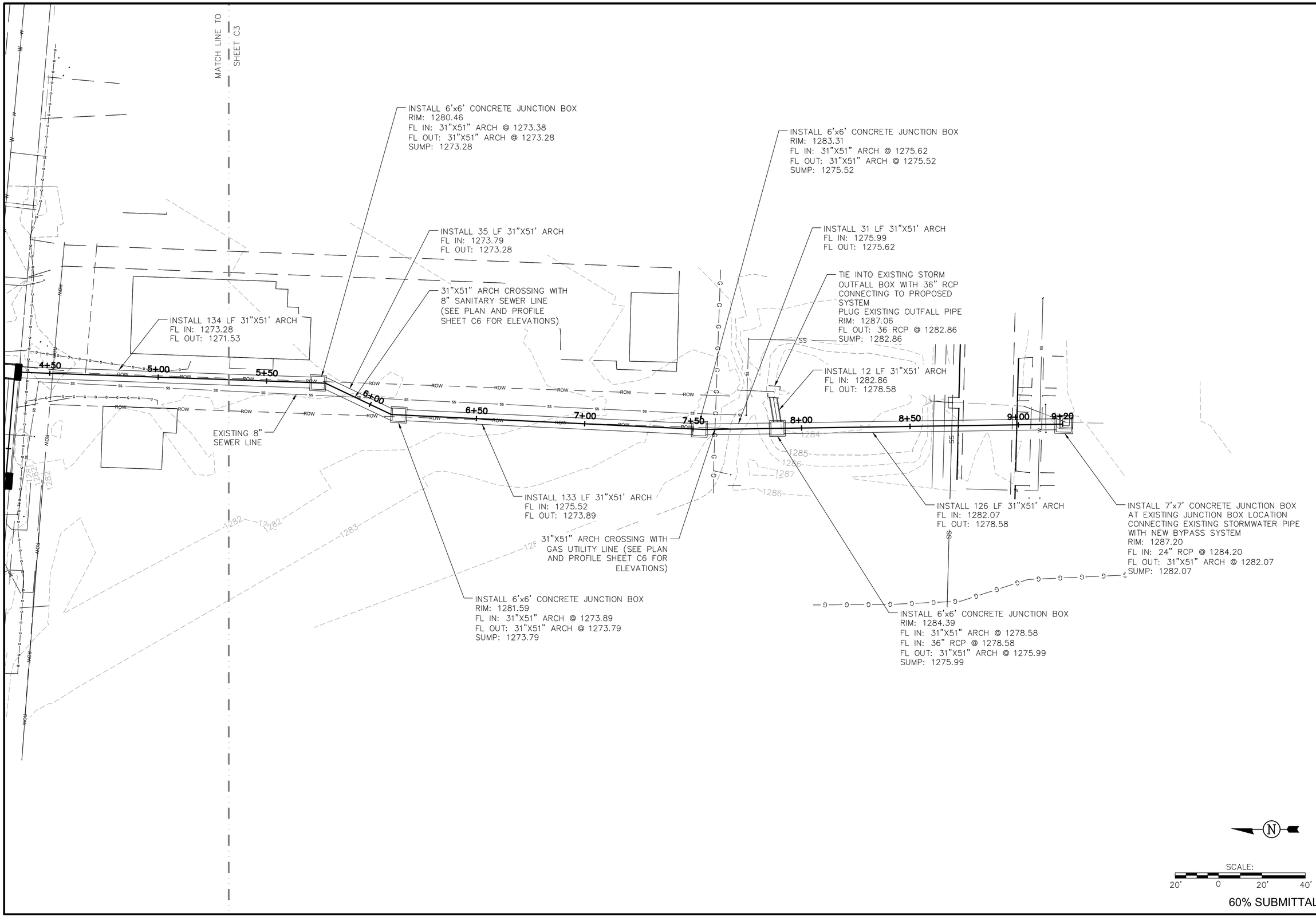

60% SUBMITTAL

SUBMITTED FOR REVIEW

SHEET TITLE: PLAN SHEET (2)

PROJECT TITLE: DRAINAGE IMPROVEMENTS
SOUTHEAST HENRY & F STREET
CITY OF BENTONVILLE
BENTONVILLE, ARKANSAS

REVISIONS:

NO:	DATE:	DESCRIPTION:	BY:

CIVIL ENGINEERING AND
ENVIRONMENTAL SERVICES
3512 SOUTH SHACKLEFORD RD
LITTLE ROCK, ARKANSAS 72205
PH: (501) 221-7122 FX: (501) 221-7775

DESIGNED BY:	JDM	DATE: FEB. 18, 2022
DRAWN BY:	JDM	
CHECKED BY:	BJW	SCALE: 1" = 20'

FILE: L:\BENTONVILLE, CITY OF\BENV-12313 - SE HENRY AND F STREET\DRAWINGS\BENV-12313 SCHEMATIC - 60%.DWG

JOB NUMBER:
BENV-12313

SHEET NUMBER:
C4

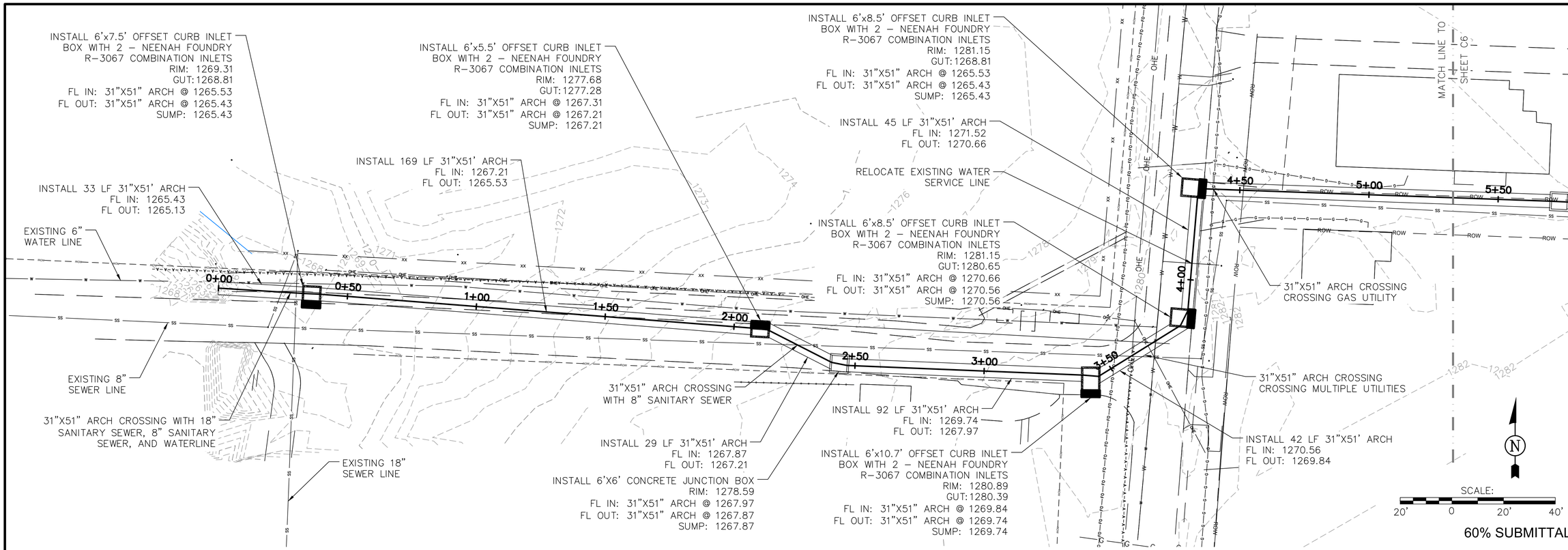

SE HENRY & F STREET DRAINAGE IMPROVEMENT PROFILE

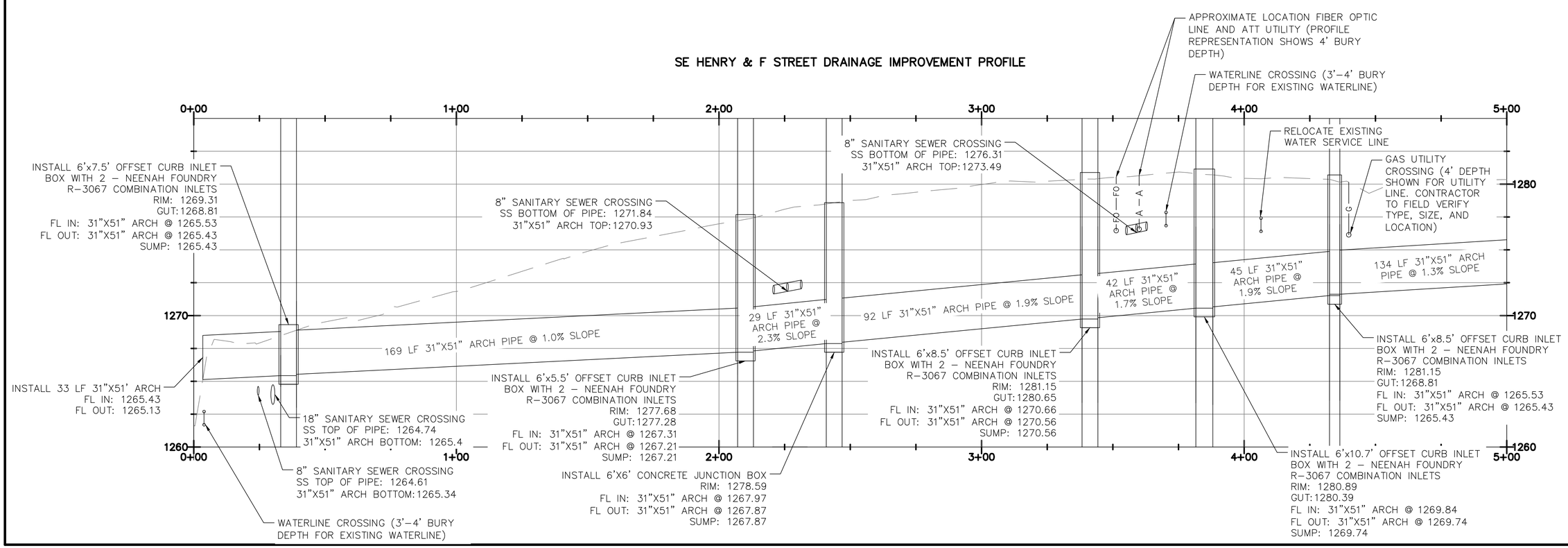

SUBMITTED FOR REVIEW

SHEET TITLE: PLAN & PROFILE SHEET (1)

PROJECT TITLE: DRAINAGE IMPROVEMENTS SOUTHEAST HENRY & F STREET CITY OF BENTONVILLE BENTONVILLE, ARKANSAS

REVISIONS:

NO:	DATE:	DESCRIPTION:	BY:

CIVIL ENGINEERING AND ENVIRONMENTAL SERVICES
3512 SOUTH SHACKLEFORD RD
LITTLE ROCK, ARKANSAS 72205
PH: (501) 221-7122 FX: (501) 221-7775

DESIGNED BY: JDM
DRAWN BY: JDM
CHECKED BY: BJW
DATE: FEB. 18, 2022
SCALE: 1" = 20'

FILE: L:\BENTONVILLE, CITY OF\BENV-12313 - SE HENRY AND F STREET\DRAWINGS\BENV-12313 SCHEMATIC - 60%.DWG

JOB NUMBER: BENV-12313

SHEET NUMBER: C5

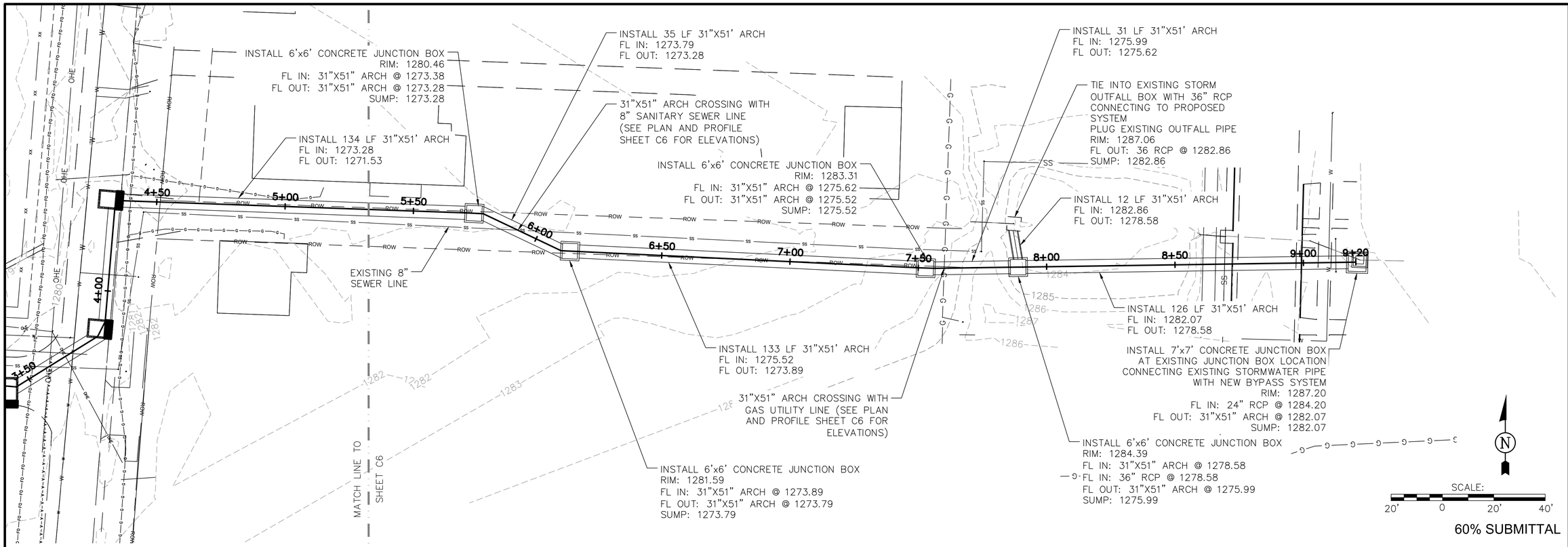

60% SUBMITTAL

SE HENRY & F STREET DRAINAGE IMPROVEMENT PROFILE

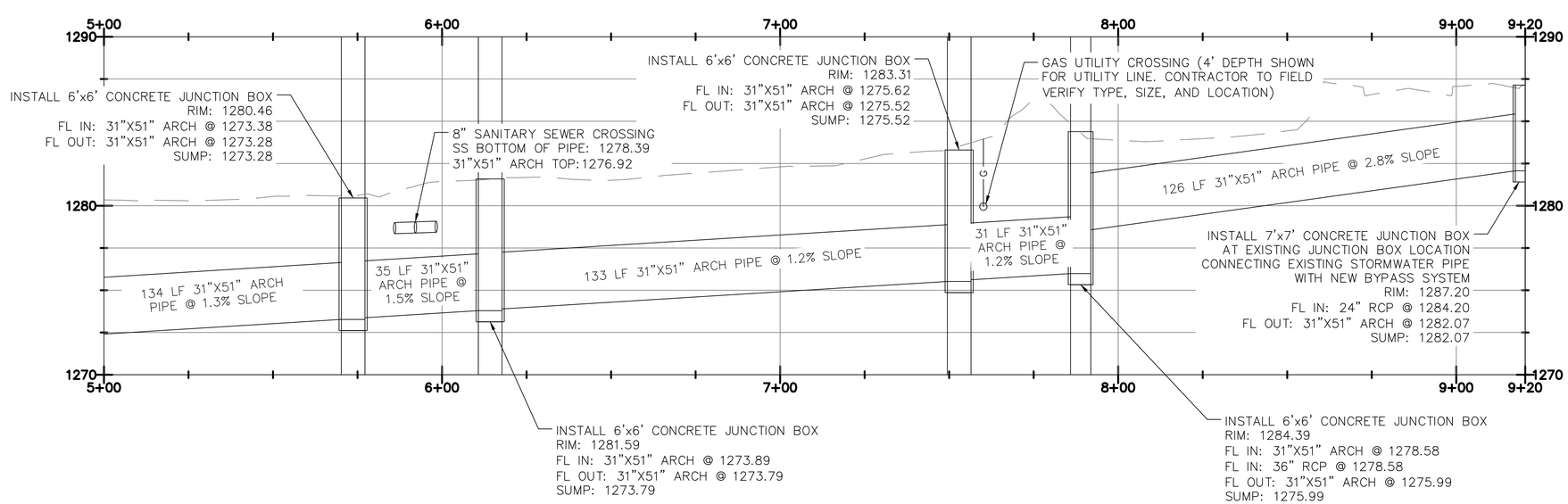

SUBMITTED FOR REVIEW

SHEET TITLE: PLAN & PROFILE SHEET (2)

PROJECT TITLE: DRAINAGE IMPROVEMENTS
SOUTHEAST HENRY & F STREET
CITY OF BENTONVILLE
BENTONVILLE, ARKANSAS

REVISIONS:

NO:	DATE:	DESCRIPTION:	BY:

CIVIL ENGINEERING AND
ENVIRONMENTAL SERVICES
3512 SOUTH SHACKLEFORD RD
LITTLE ROCK, ARKANSAS 72205
PH: (501) 221-7122 FX: (501) 221-7775

DESIGNED BY: JDM
DRAWN BY: JDM
CHECKED BY: BJW
DATE: FEB. 18, 2022
SCALE: 1" = 20'

FILE: L:\BENTONVILLE, CITY OF\BENV-12313 - SE HENRY AND F STREET\DRAWINGS\BENV-12313 SCHEMATIC - 60%.DWG

JOB NUMBER:
BENV-12313

SHEET NUMBER:
C6

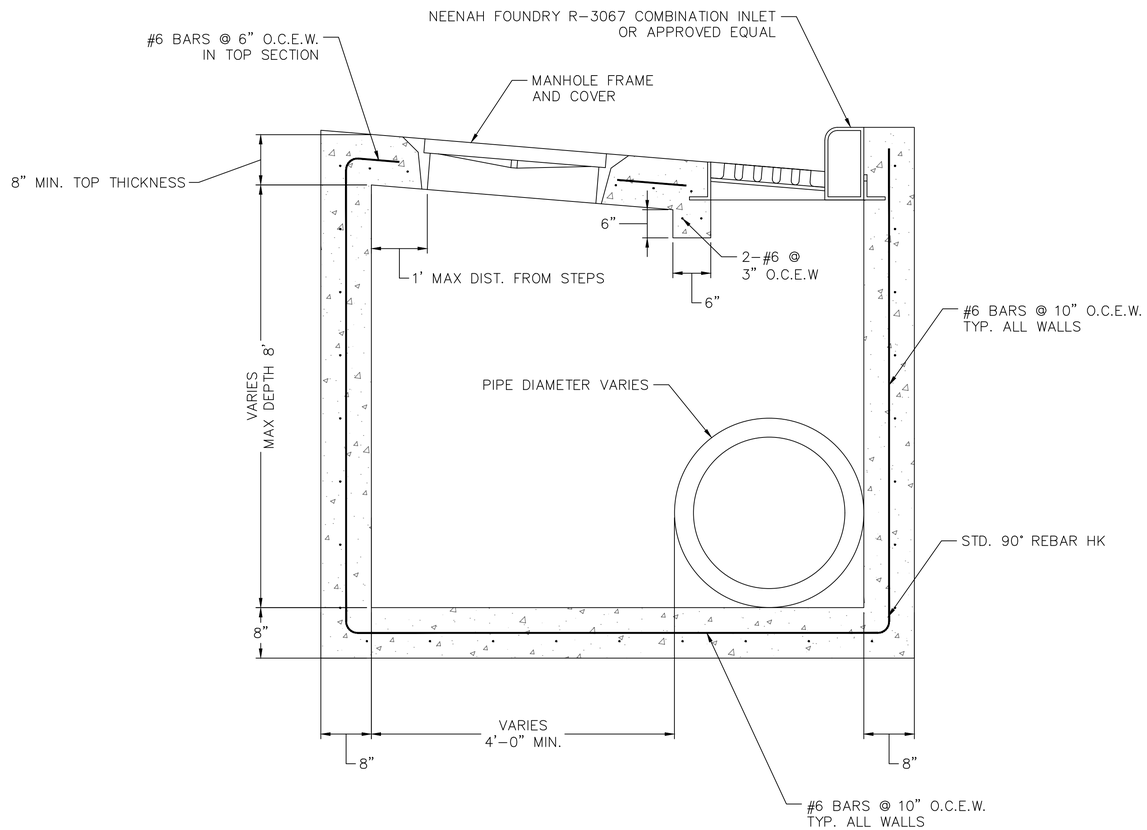

TYPICAL INLET BOX DETAIL

SCALE: NTS

1
C3 C7

SUBMITTED FOR REVIEW

SHEET TITLE: PLAN SHEET (1)

PROJECT TITLE: DRAINAGE IMPROVEMENTS
SOUTHEAST HENRY & F STREET
CITY OF BENTONVILLE
BENTONVILLE, ARKANSAS

REVISIONS:

NO.	DATE:	DESCRIPTION:	BY:

PMI
CIVIL ENGINEERING AND
ENVIRONMENTAL SERVICES
3512 SOUTH SHACKLEFORD RD
LITTLE ROCK, ARKANSAS 72205
PH: (501) 221-7122 FX: (501) 221-7775

DESIGNED BY: JDM
DRAWN BY: JDM
CHECKED BY: BJW
DATE: FEB. 18, 2022
SCALE: 1" = 40'

FILE: L:\BENTONVILLE, CITY OF\BENV-12313 - SE HENRY AND F STREET\DRAWINGS\BENV-12313 SCHEMATIC - 60%.DWG

JOB NUMBER:
BENV-12313

SHEET NUMBER:
C7

60% SUBMITTAL